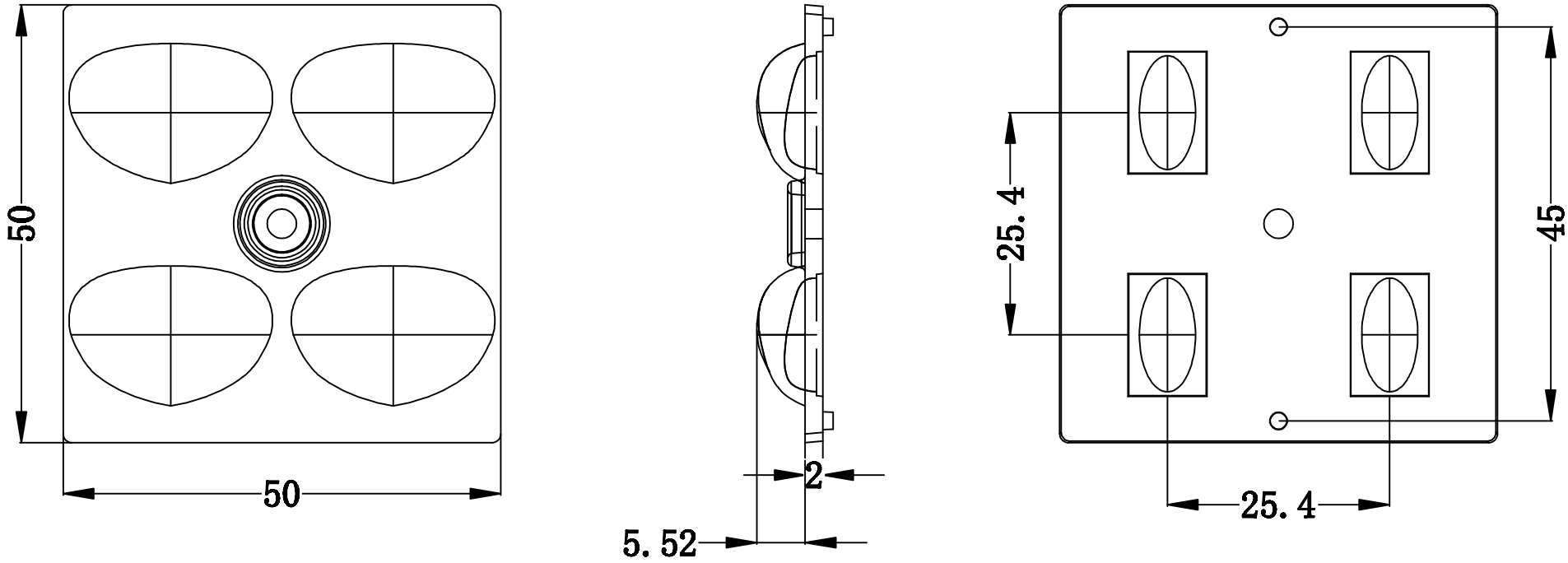

NOTE:
1. ALL SURFACES NO SHRINKAGE, BURRS, JUNCTION LINES ALLOWED
2. CRITICAL DIMENSIONS ARE INDICATED ON THE DRAWING
3. ALL INDICATED SURFACES ARE POLISHED, THE OPTICAL SURFACE POLISHING MUST BE SPI-A1 STANDARD
4. THE PARTS IS COMPLIANT TO ROHS AND REACH STANDARD

CHANGE													
						PART		顏色 COLOR	Transparency	SCALE	1:1	ASAHI OPTICS LIMITED	
						0 ~ 10	±0.05						
						10 ~ 20	±0.10	材質 MATERIAL	PMMA	UNIT	mm		
						20 ~ 30	±0.15						
	A/0	2016-11-21	NEW	——	——	30 ~	±0.20	設計 DESIGN		SIZE	A4	料號 PART NO.	
						Angle	± 1°						
	版次 REV	日期 DATE	變更說明 MODIFICATION DESCRIPTION	變更 CHANGE	核准 APPROVE	DIM	TOL	核准 APPROVE		SHEET		品名 Product:	