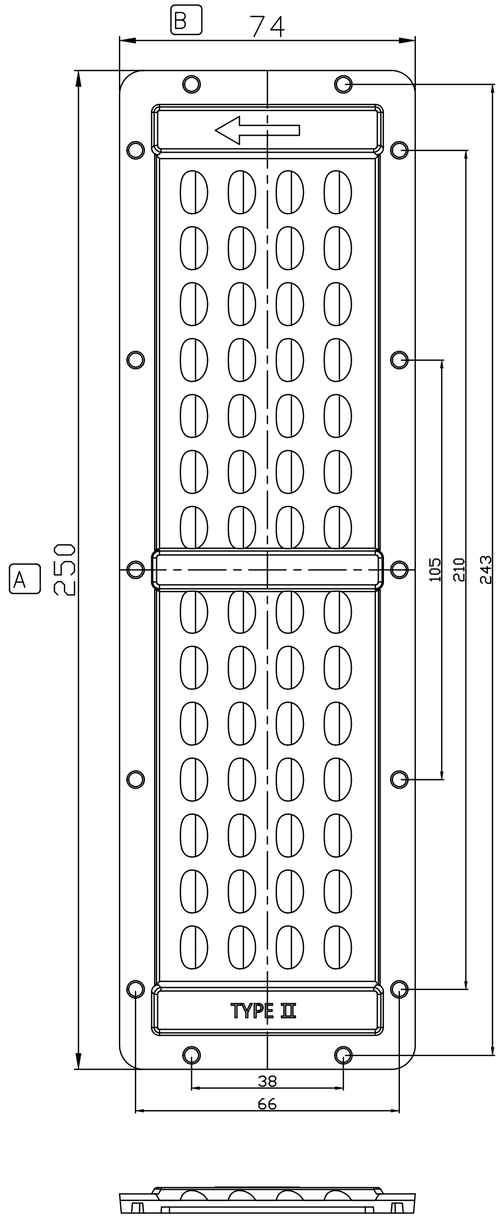

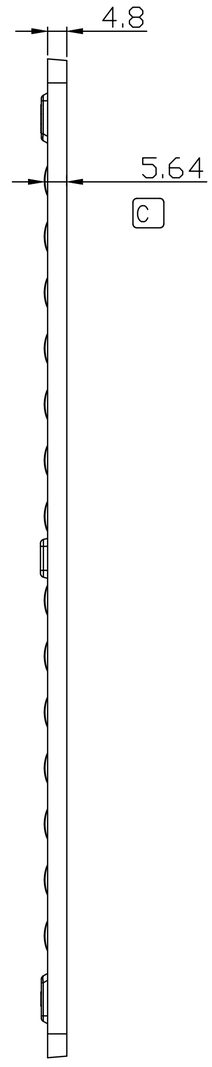

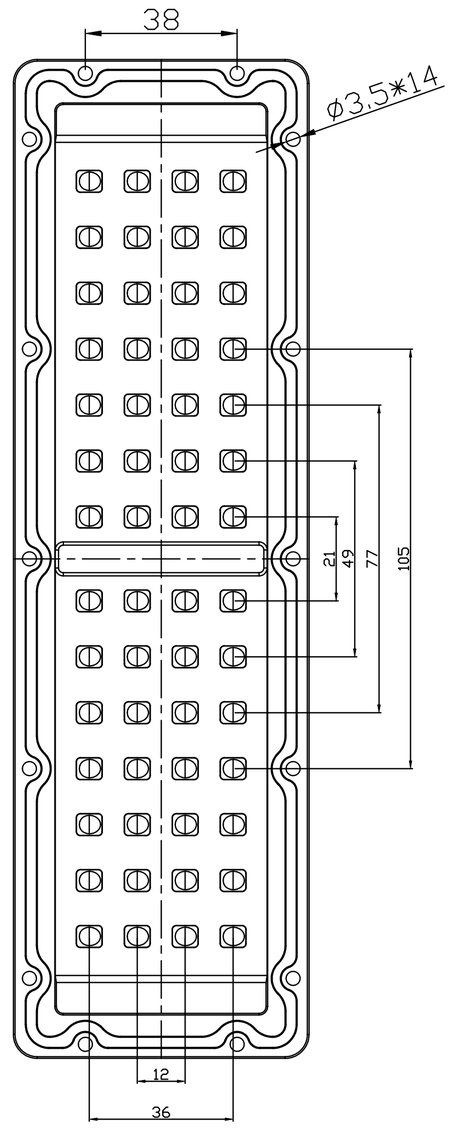

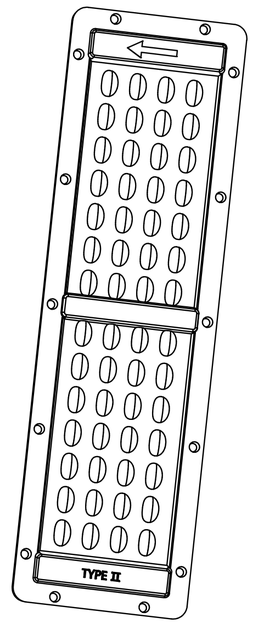

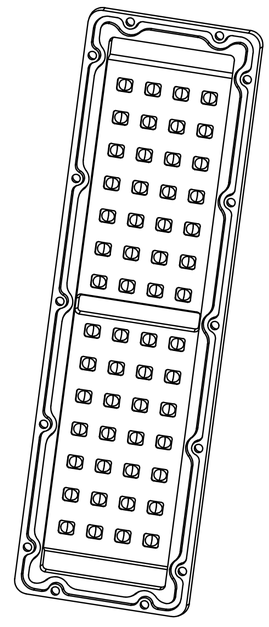

NOTE:
1. ALL SURFACES NO SHRINKAGE, BURRS, JUNCTION LINES ALLOWED
2. CRITICAL DIMENSIONS ARE INDICATED ON THE DRAWING
3. ALL INDICATED SURFACES ARE POLISHED, THE OPTICAL SURFACE POLISHING MUST BE SPI-A1 STANDARD
4. THE PARTS IS COMPLIANT TO ROHS AND REACH STANDARD

CHANGE					
A/0	2020-12-24	NEW	———	———	
版次 REV	日期 DATE	變更說明 MODIFICATION DESCRIPTION	變更 CHANGE	核准 APPROVE	

PART	
0 ~ 10	±0.05
10 ~ 20	±0.10
20 ~ 30	±0.15
30 ~	±0.20
Angle	± 1°
DIM	TOL

顏色 COLOR	Transparency		SCALE	1:1
材質 MATERIAL	PC		UNIT	mm
設計 DESIGN	C. Y. CAI	2020-12-24	SIZE	A4
核准 APPROVE			SHEET	

ASAHI OPTICS LIMITED

料號 PART NO. ARST250D56LED3030T2M

品名 Product: Street light lens