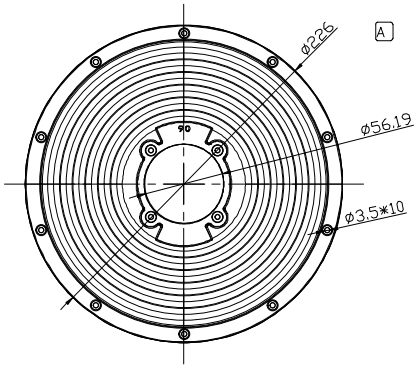

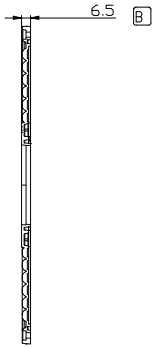

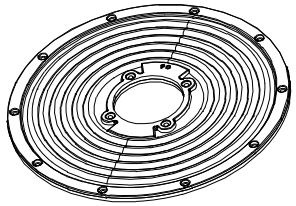

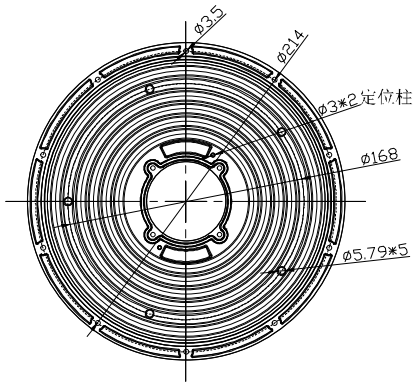

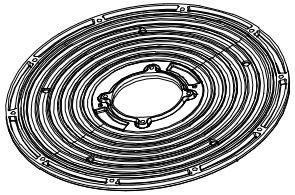

NOTE:
1. ALL SURFACES NO SHRINKAGE, BURRS, JUNCTION LINES ALLOWED
2. CRITICAL DIMENSIONS ARE INDICATED ON THE DRAWING
3. ALL INDICATED SURFACES ARE POLISHED, THE OPTICAL SURFACE POLISHING MUST BE SPI-A1 STANDARD
4. THE PARTS IS COMPLIANT TO ROHS AND REACH STANDARD

CHANGE	REV 版次	DATE 日期	MODIFICATION DESCRIPTION 变更说明	CHANGE 变更	APPROVE 核准
	A/0	2021-05-21	NEW	——	——

PART DIM	TOL
0 ~ 10	±0.05
10 ~ 20	±0.10
20 ~ 30	±0.15
30 ~	±0.20
Angle	± 1°

颜色 COLOR	Transparency		SCALE	1:1	ASAHI OPTICS LIMITED
材质 MATERIAL	PMMA		UNIT	mm	
設計 DESIGN	C. Y. CAI	2021-05-21	SIZE	A4	料号 PART NO. UFO226D60G,90G,120G-150W-K56
核准 APPROVE			SHEET		品名 Product: High Bay Lens