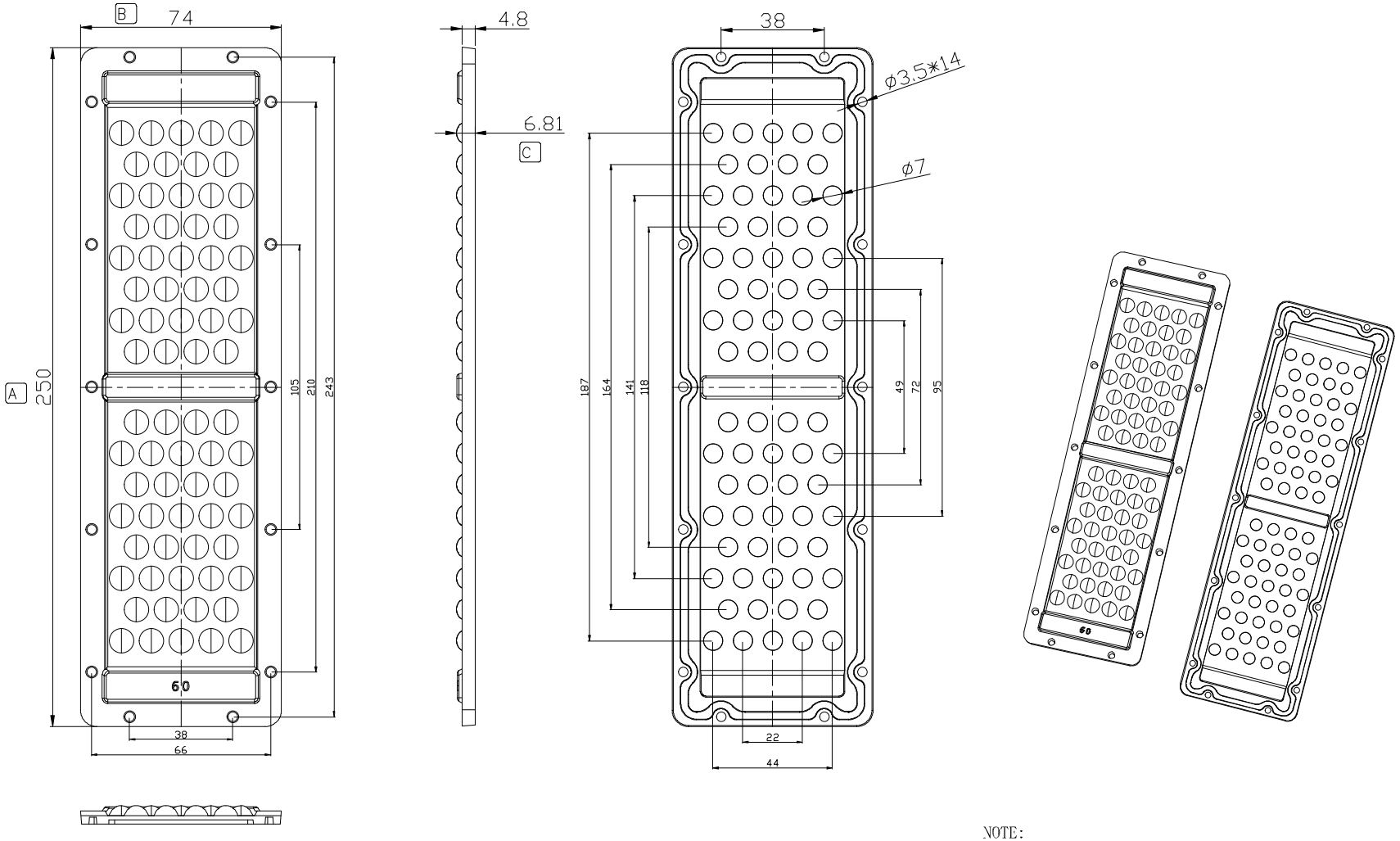

NOTE:
1. ALL SURFACES NO SHRINKAGE, BURRS, JUNCTION LINES ALLOWED
2. CRITICAL DIMENSIONS ARE INDICATED ON THE DRAWING
3. ALL INDICATED SURFACES ARE POLISHED, THE OPTICAL SURFACE POLISHING MUST BE SPI-A1 STANDARD
4. THE PARTS IS COMPLIANT TO ROHS AND REACH STANDARD

CHANGE												
					PART 0 ~ 10	±0.05	顏色 COLOR	Transparency		SCALE	1:1	ASAHI OPTICS LIMITED
					10 ~ 20	±0.10	材質 MATERIAL	PC		UNIT	mm	
	A/0	2020-12-24	NEW	——	——	20 ~ 30 ±0.15 / 30 ~ ±0.20	設計 DESIGN	C. Y. CAI	2020-12-24	SIZE	A4	料號 PART NO. ARHB250D72LEDT60
	版次 REV	日期 DATE	變更說明 MODIFICATION DESCRIPTION	變更 CHANGE	核准 APPROVE	Angle ± 1° / DIM TOL	核准 APPROVE			SHEET		品名 Product: High Bay lens