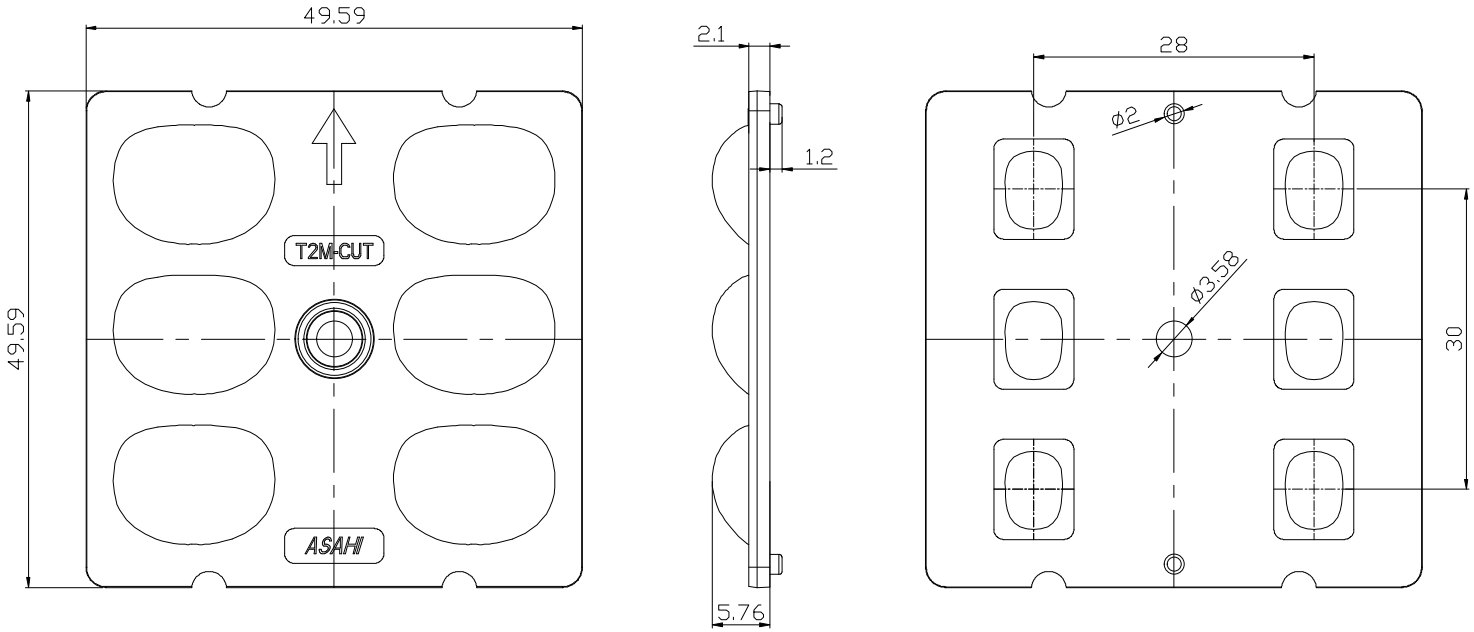

NOTE:
1. ALL SURFACES NO SHRINKAGE, BURRS, JUNCTION LINES ALLOWED
2. CRITICAL DIMENSIONS ARE INDICATED ON THE DRAWING
3. ALL INDICATED SURFACES ARE POLISHED, THE OPTICAL SURFACE POLISHING MUST BE SPI-A1 STANDARD
4. THE PARTS IS COMPLIANT TO ROHS AND REACH STANDARD

CHANGE												
						PART		颜色 COLOR	Transparency	SCALE	1:1	ASAHI OPTICS LIMITED
						0 ~ 10	±0.05					
						10 ~ 20	±0.10	材质 MATERIAL	PC	UNIT	mm	
						20 ~ 30	±0.15					
	A/0	2021-06-21	NEW	——	——	30 ~	±0.20	設計 DESIGN	C. Y. CAI 2021-06-21	SIZE	A4	料号 PART NO. ARST50D6LEDT2M-Cutoff
	版次 REV	日期 DATE	变更说明 MODIFICATION DESCRIPTION	变更 CHANGE	核准 APPROVE	Angle	± 1°	核准 APPROVE		SHEET		品名 Product: Street light lens
						DIM	TOL					