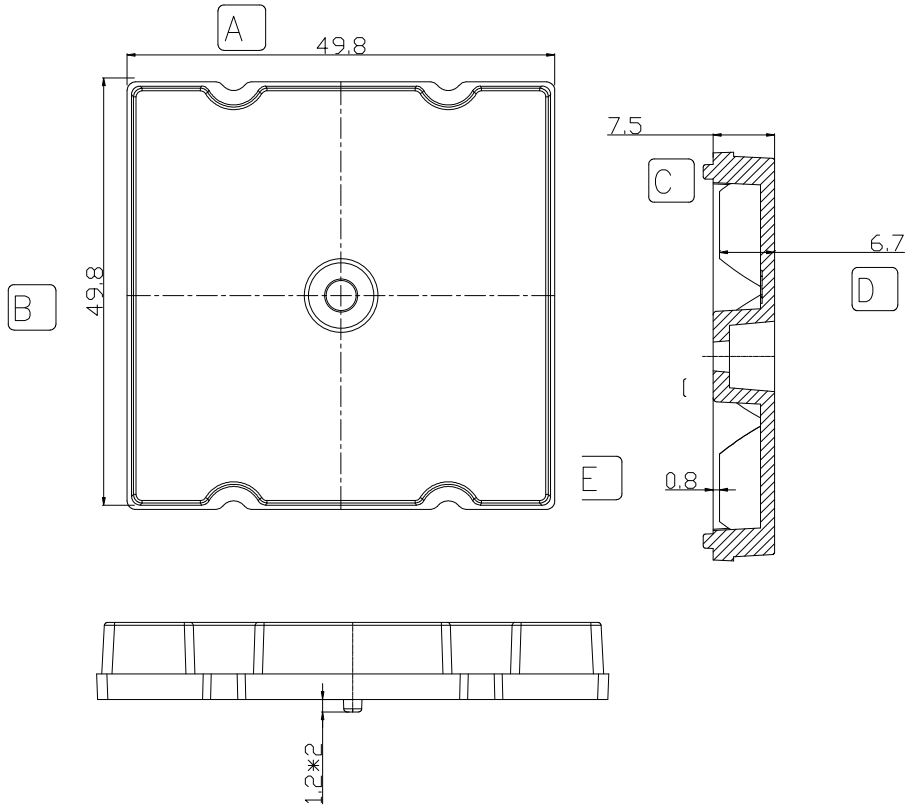

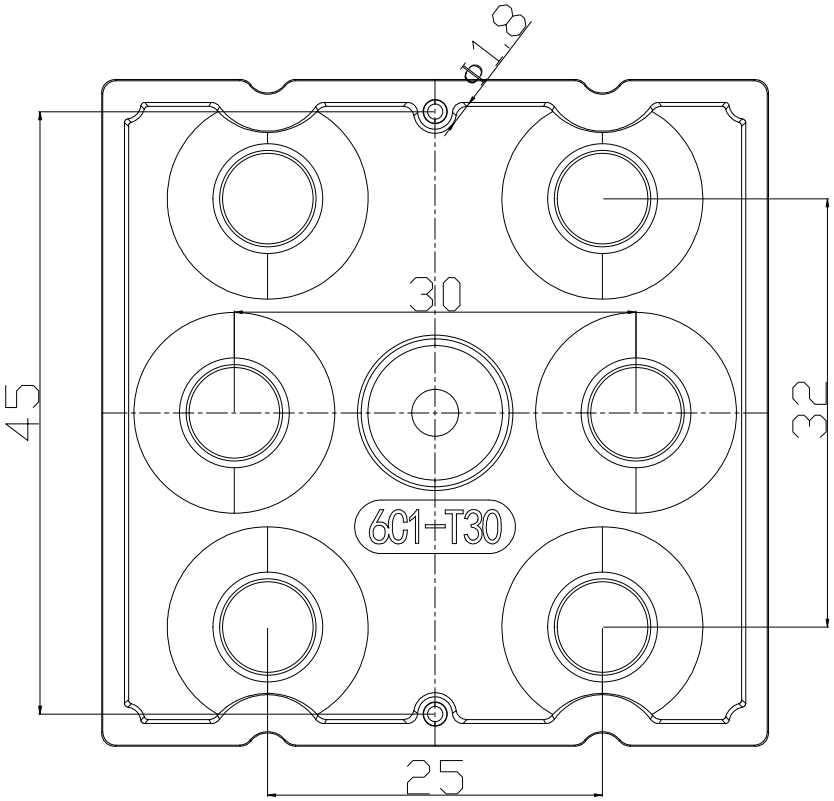

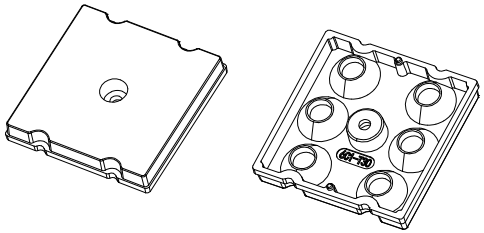

NOTE:
1. ALL SURFACES NO SHRINKAGE, BURRS, JUNCTION LINES ALLOWED
2. CRITICAL DIMENSIONS ARE INDICATED ON THE DRAWING
3. ALL INDICATED SURFACES ARE POLISHED, THE OPTICAL SURFACE POLISHING MUST BE SPI-A1 STANDARD
4. THE PARTS IS COMPLIANT TO ROHS AND REACH STANDARD

CHANGE													
					PART		顏色 COLOR	Transparency		SCALE	1:1	ASAHI OPTICS LIMITED	
					0 ~ 10	±0.05							
					10 ~ 20	±0.10	材質 MATERIAL	PC		UNIT	mm		
					20 ~ 30	±0.15							
	A/0	2020-12-24	NEW	——	——	30 ~ ±0.20	設計 DESIGN	C. Y. CAI	2020-12-24	SIZE	A4	料號 PART NO.	ALHB50D6LED5050T30G
						Angle ± 1°							
	版次 REV	日期 DATE	變更說明 MODIFICATION DESCRIPTION	變更 CHANGE	核准 APPROVE	DIM TOL	核准 APPROVE			SHEET		品名 Product:	High Bay lens