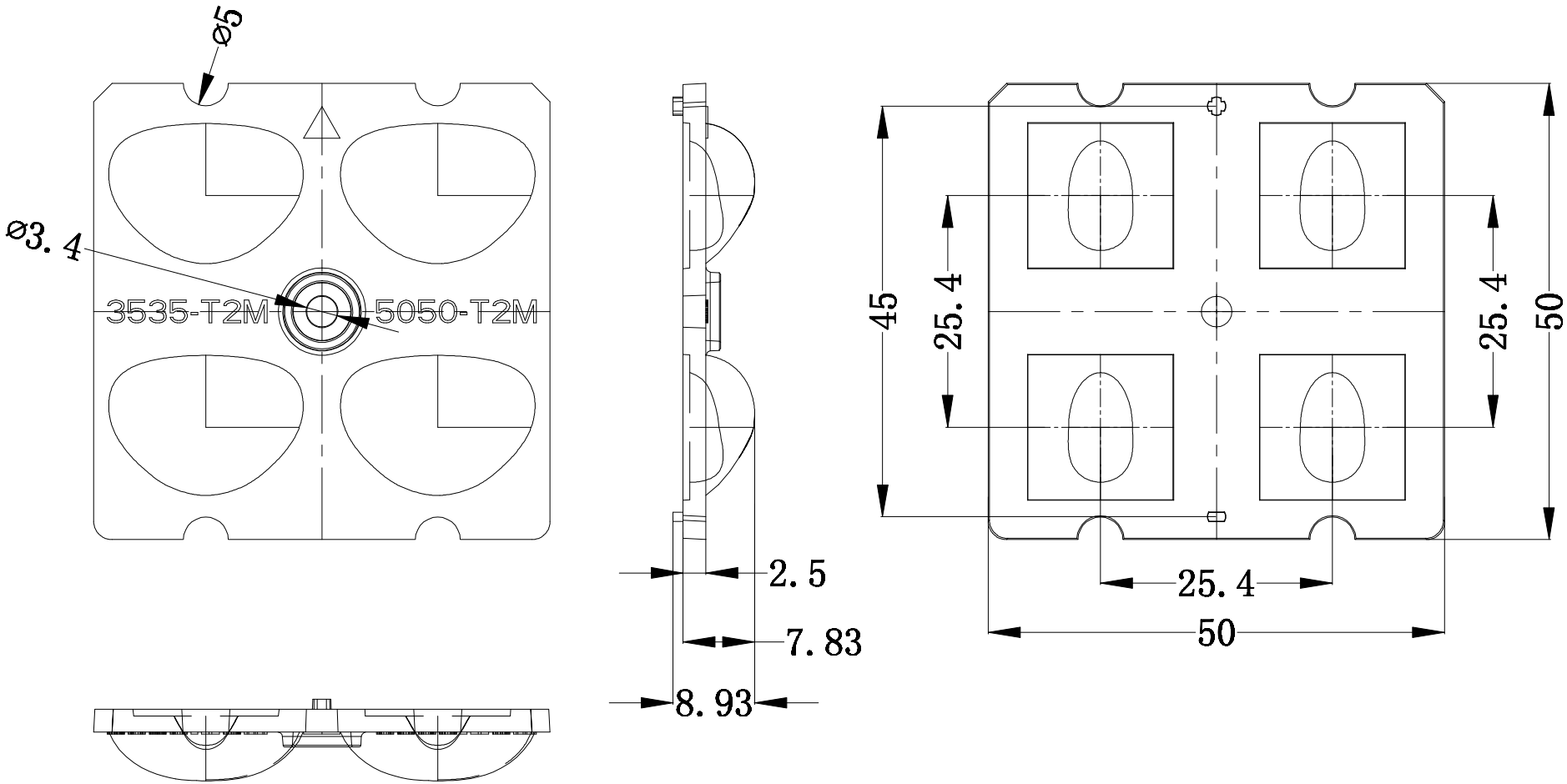

NOTE:
1. ALL SURFACES NO SHRINKAGE, BURRS, JUNCTION LINES ALLOWED
2. CRITICAL DIMENSIONS ARE INDICATED ON THE DRAWING
3. ALL INDICATED SURFACES ARE POLISHED, THE OPTICAL SURFACE POLISHING MUST BE SPI-A1 STANDARD
4. THE PARTS IS COMPLIANT TO ROHS AND REACH STANDARD

CHANGE						PART						
						0 ~ 10	±0.05	顏色 COLOR	Transparency	SCALE	1:1	ASAHI OPTICS LIMITED
						10 ~ 20	±0.10	材質 MATERIAL	PMMA	UNIT	mm	
A/0	2018-08-04	NEW	——	——		20 ~ 30	±0.15	設計 DESIGN	C. Y. CAI 2018-08-04	SIZE	A4	料號 PART NO. ALST50D4LED3535&5050T2M
						30 ~	±0.20					
						Angle	± 1°	核准 APPROVE		SHEET		品名 Product: Street light lens
版次 REV	日期 DATE	變更說明 MODIFICATION DESCRIPTION	變更 CHANGE	核准 APPROVE		DIM	TOL					