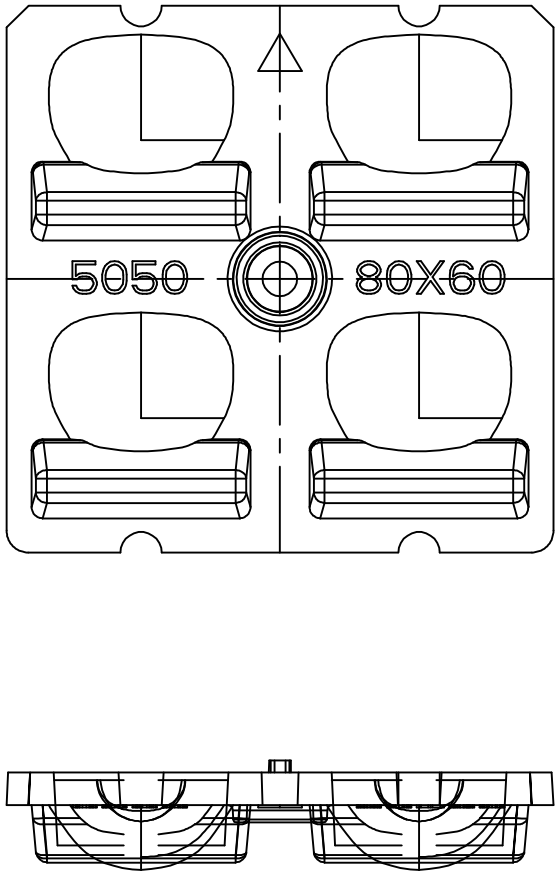


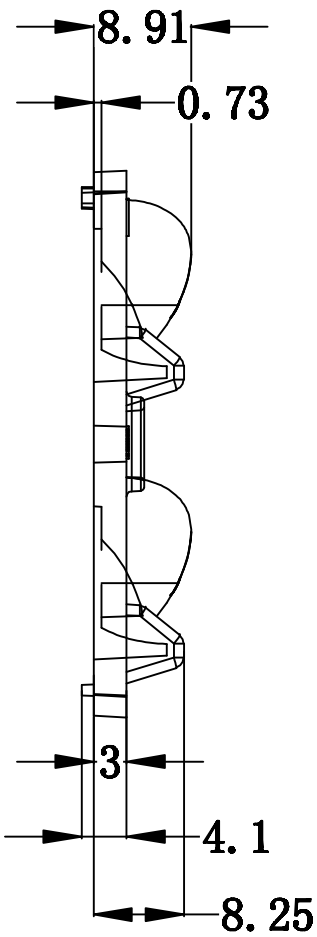


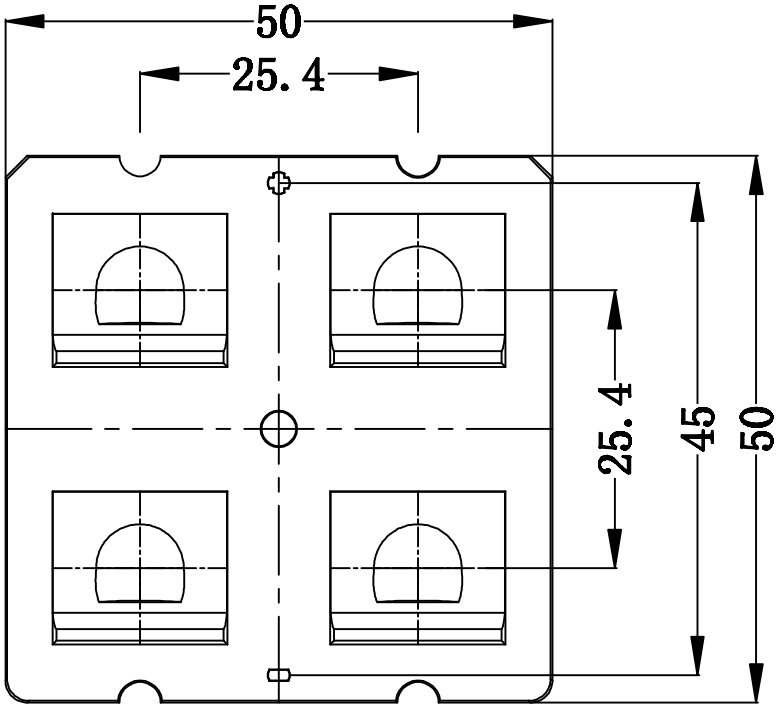


NOTE:
1. ALL SURFACES NO SHRINKAGE, BURRS, JUNCTION LINES ALLOWED
2. CRITICAL DIMENSIONS ARE INDICATED ON THE DRAWING
3. ALL INDICATED SURFACES ARE POLISHED, THE OPTICAL SURFACE POLISHING MUST BE SPI-A1 STANDARD
4. THE PARTS IS COMPLIANT TO ROHS AND REACH STANDARD

| CHANGE | | | | | | PART | | | | | | | |
|---|---|---|---|---|---|---|---|---|---|---|---|---|---|
| | | | | | | 0 ~ 10 | ±0.05 | 顏色 COLOR | Transparency | SCALE | 1:1 | ASAHI OPTICS LIMITED | |
| | | | | | | 10 ~ 20 | ±0.10 | 材質 MATERIAL | PC-1250Z100 | UNIT | mm | | |
| A/0 | 2018-07-02 | NEW | —— | —— | | 20 ~ 30 | ±0.15 | 設計 DESIGN | C. Y. CAI 2018-07-02 | SIZE | A4 | 料號 PART NO. | ALST4LED5050T8060 |
| | | | | | | 30 ~ | ±0.20 | | | | | | |
| | | | | | | Angle | ± 1° | | | | | | |
| 版次 REV | 日期 DATE | 變 更 說 明 MODIFICATION DESCRIPTION | 變更 CHANGE | 核准 APPROVE | | DIM | TOL | 核准 APPROVE | | SHEET | | 品名 Product: | Street light lens |