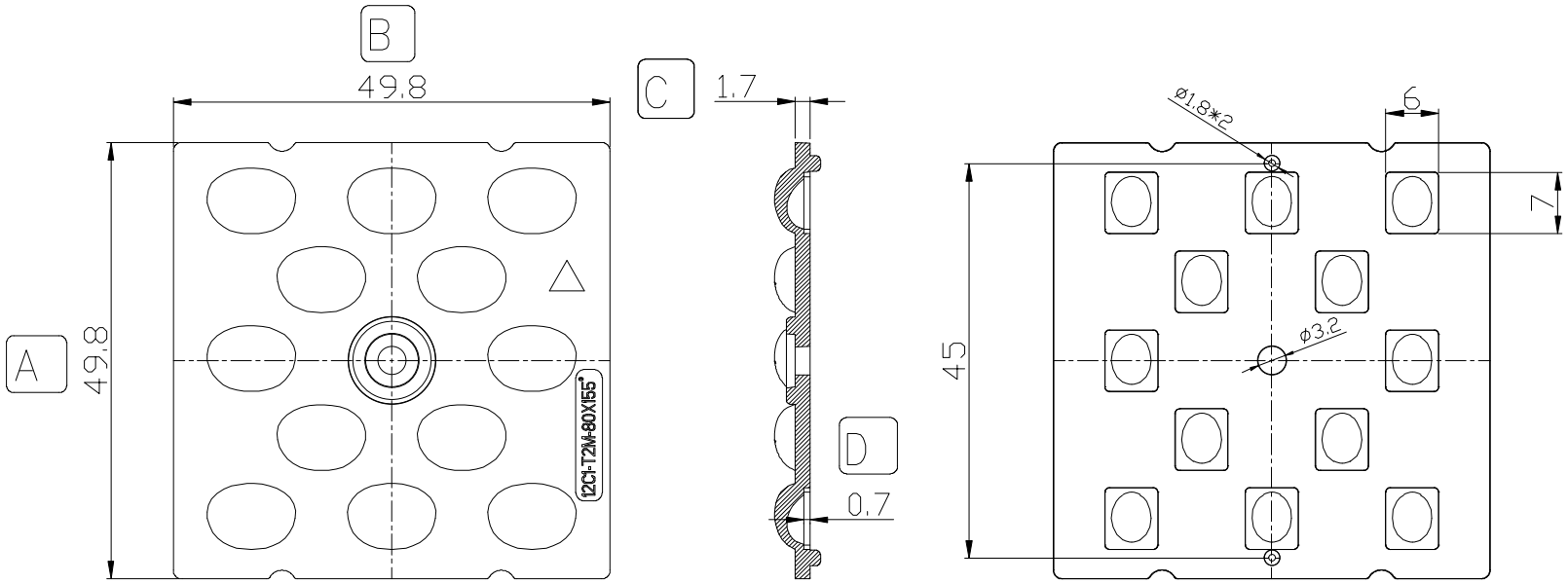

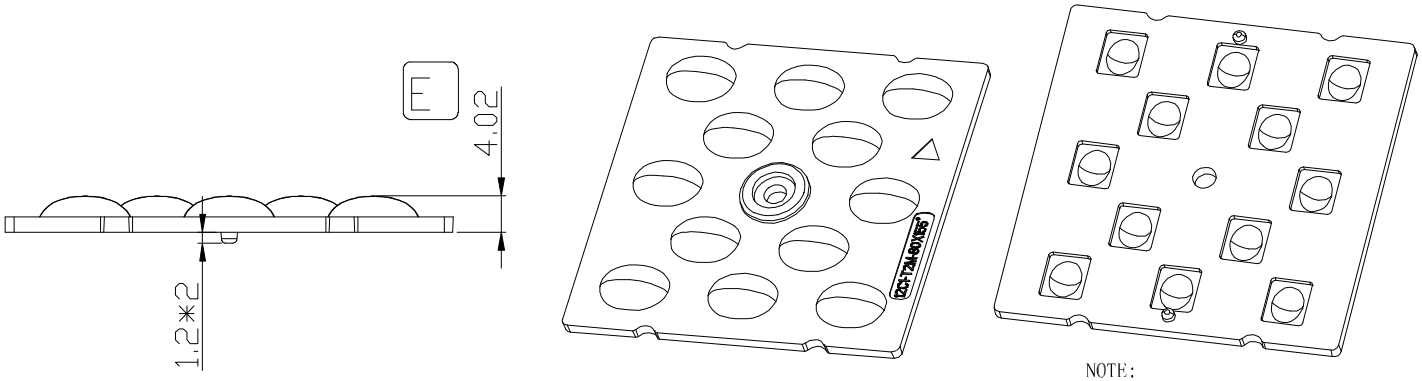

NOTE:
1. ALL SURFACES NO SHRINKAGE, BURRS, JUNCTION LINES ALLOWED
2. CRITICAL DIMENSIONS ARE INDICATED ON THE DRAWING
3. ALL INDICATED SURFACES ARE POLISHED, THE OPTICAL SURFACE POLISHING MUST BE SPI-A1 STANDARD
4. THE PARTS IS COMPLIANT TO ROHS AND REACH STANDARD

CHANGE						PART							
						0 ~ 10	±0.05	顏色 COLOR	Transparency	SCALE	1:1	ASAHI OPTICS LIMITED	
						10 ~ 20	±0.10	材質 MATERIAL	PMMA	UNIT	mm		
	A/0	2019-11-21	NEW	——	——	20 ~ 30	±0.15	設計 DESIGN	C. Y. CAI 2019-11-21	SIZE	A4	料號 PART NO.	ALST50D12LED5050T2W
						30 ~	±0.20						
	版次 REV	日期 DATE	變更說明 MODIFICATION DESCRIPTION	變更 CHANGE	核准 APPROVE	Angle	± 1°	核准 APPROVE		SHEET		品名 Product:	Street light lens
						DIM	TOL						