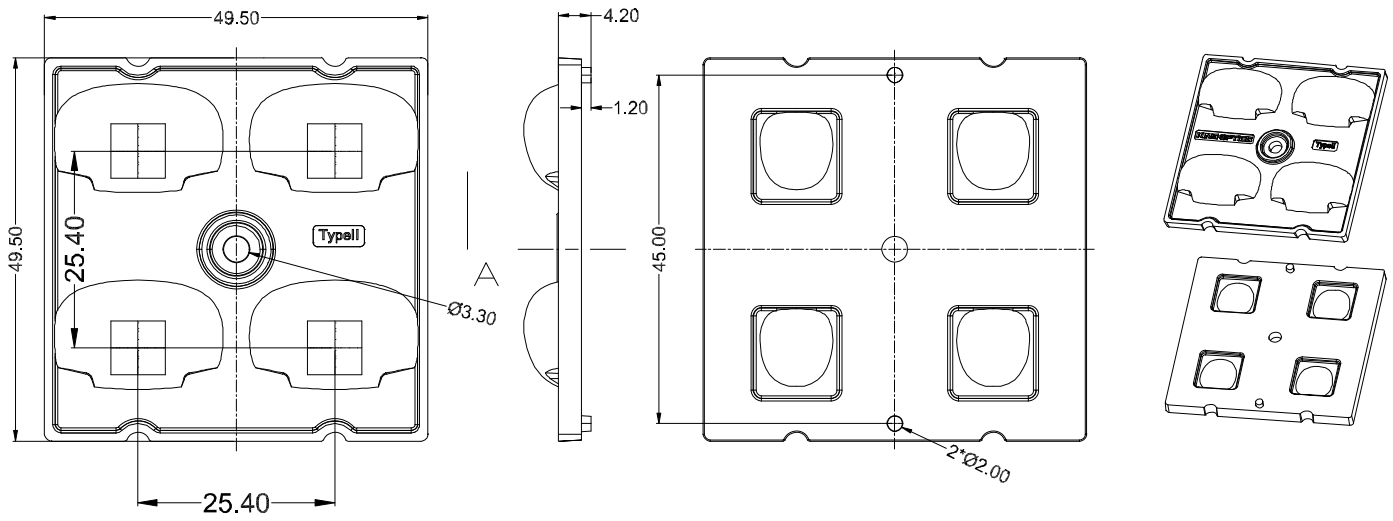

NOTE:

1. ALL SURFACES NO SHRINKAGE,BURRS,JUNCTION LINES ALLOWED
2. CRITICAL DIMENSIONS ARE INDICATED ON THE DRAWING
3. ALL INDICATED SURFACES ARE POLISHED, THE OPTICAL SURFACE POLISHING MUST BE SPI-A1 STANDARD
4. THE PARTS IS COMPLIANT TO ROHS AND REACH STANDARD

CHANGE						PART	
						0 ~ 10	±0.05
						10 ~ 20	±0.10
						20 ~ 30	±0.15
	A/0	2021-05-21	NEW	——	——	30 ~	±0.20
						Angle	± 1°
	版次 REV	日期 DATE	变更说明 MODIFICATION DESCRIPTION	变更 CHANGE	核准 APPROVE	DIM	TOL

颜色 COLOR	Transparency		SCALE	1:1	ASAHI OPTICS LIMITED
材质 MATERIAL	PC		UNIT	mm	ASAHI
设计 DESIGN	C.Y.CAI	2022-05-25	SIZE	A4	料号 PART NO. AJST50D4LED7070T2M
核准 APPROVE			SHEET		品名 Product High bay light lens